NOTES:

1) CRUSHED STONE NOT TO EXCEED #2 IN SIZE.

2) GRAVITY LINE SHALL BE SDR 21 OR 26

3) THE SEWER LATERAL SHALL BE LAID AT A UNIFORM GRADE OF ¼ INCH PER FOOT (ABOUT 2%)

4) WOOD SHALL NOT BE USED

SARATOGA COUNTY SEWER DISTRICT #1 RESERVES THE RIGHT, AT OUR DISCRETION, TO CHANGE, MODIFY, ADD OR REMOVE PORTIONS OF THESE DETAIL SPEC'S AT ANY TIME

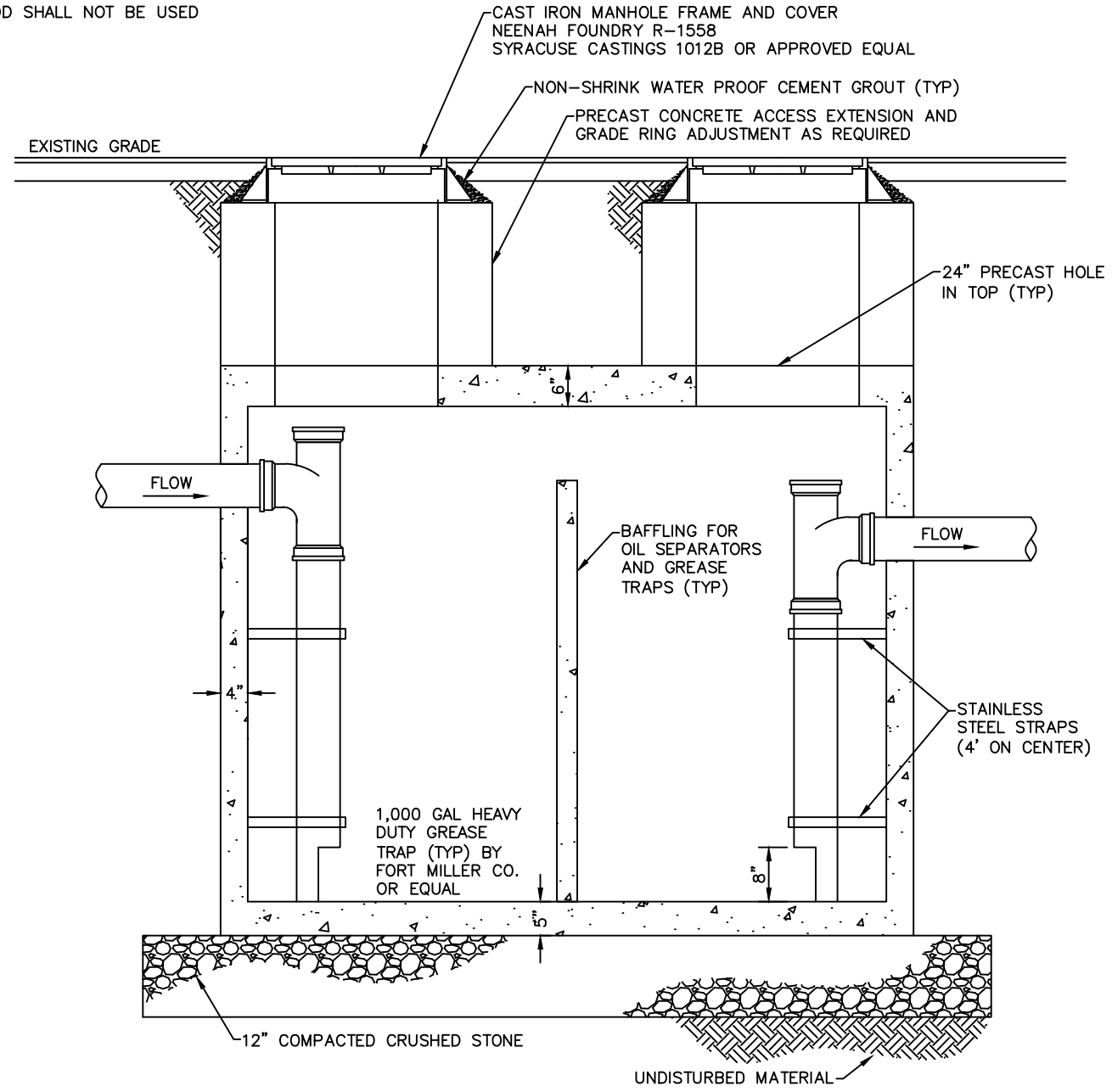

HEAVY DUTY PRECAST CONCRETE GREASE TRAP

NOT TO SCALE (BY FORT MILLER CO. OR EQUAL)

SARATOGA COUNTY SEWER DISTRICT #1

1002 HUDSON RIVER ROAD, MECHANICVILLE, NEW YORK

P.O. Box 550 Mechanicville, New York 12118 Telephone: (518) 664-7396 Fax: (518) 664-6280