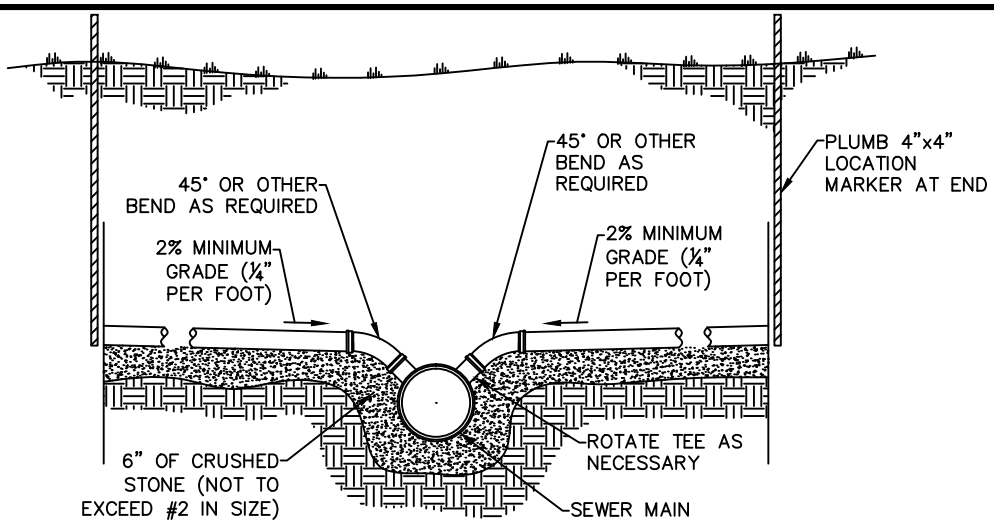

LATERAL CONNECTION SECTION

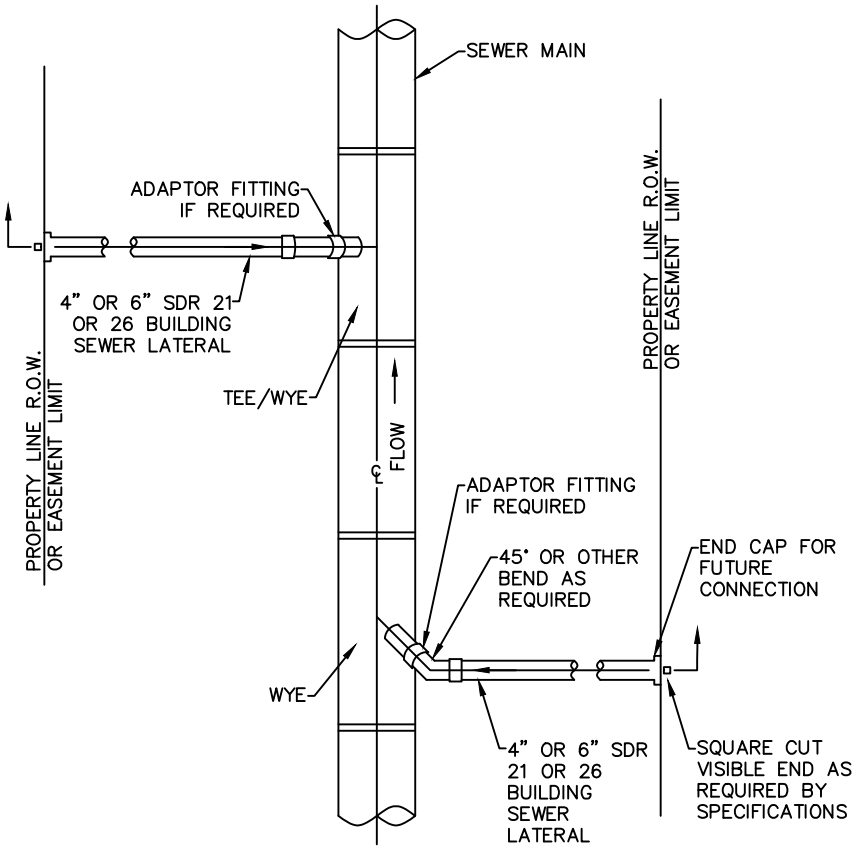

LATERAL CONNECTION PLAN

SEWER LATERAL CONNECTIONS

NOT TO SCALE

SARATOGA COUNTY SEWER DISTRICT #1 RESERVES THE RIGHT, AT OUR DISCRETION, TO CHANGE, MODIFY, ADD OR REMOVE PORTIONS OF THESE DETAIL SPEC'S AT ANY TIME

SARATOGA COUNTY SEWER DISTRICT #1

1002 HUDSON RIVER ROAD, MECHANICVILLE, NEW YORK

P.O. Box 550 Mechanicville, New York 12118 Telephone: (518) 664-7396 Fax: (518) 664-6280